ClimaTemp

OPERATION MANUAL
CPTH-12EX/18EX

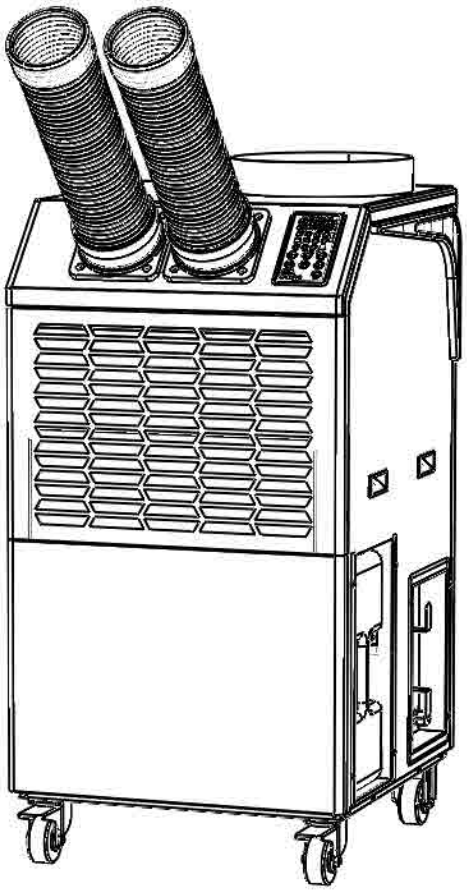

READ THIS MANUAL CAREFULLY FOR INSTRUCTIONS ON CORRECT INSTALLATION AND USAGE, AND READ ALL SAFEGUARDS

PORTABLE HEAT PUMP

Contents

Read This Manual ·····2
Safety Instructions·····2
Product Cautions ·····3-6
Specification ·····7
INVENTORY·····9
INSTALLATION & GENERAL SAFETY INFORMATION·····10
Operation ·····13
WaterTank·····17
Maintenance and Inspection·····18
Troubleshooting·····19
Fault Codes·····20
DAILY INSPECTION & MAINTENANCE·····22
Accessory List·····24
Limited Warranty·····25

Read This Manual

This manual provides important information on the safe use, installation, and maintenance of the unit. Follow these instructions carefully to extend the service life of the air conditioner and avoid injury or damage.
If problems occur, please refer to the Troubleshooting **section before contacting customer service.**
These instructions may not cover all possible operating conditions. Always use common sense and follow safety rules.

Safety Instructions

Read All Instructions Before Use

Your safety and the safety of others are very important.
Always follow all safety messages provided in this manual and on the product.



Warning: Flammable Hazard



Caution

Failure to follow instructions may result in personal injury or product damage.



Caution

To reduce the risk of explosion, fire, death, electric shock, burns or personal injury when using this product, follow basic precautions, including the following:

- This product is not intended for use by persons (including children) with reduced physical, sensory or mental capabilities, or lack of experience and knowledge, unless they have been given supervision or instruction concerning use of the appliance by a person responsible for their safety.
- Children should be supervised to ensure that they do not play with the appliance.
- Install the product correctly to ensure the required space dimensions, including the minimum allowable distance to adjacent structures.
- Operate or repair in accordance with the correct wiring method.
- If the power cord is damaged, it must be replaced with a dedicated power cord or assembly provided by the manufacturer or its service agent.
- Do not use the product in rooms with explosion hazards.
- Do not use the product in corrosive environments.
- Place the product upright and on a stable surface.
- Allow the product to dry thoroughly after wet cleaning. Do not operate while damp.
- Do not operate the equipment with wet hands.
- Do not spray water directly onto the product.
- Never insert any objects or limbs into the moving parts of the product.
- Do not cover or transport the equipment during operation.
- Do not sit on the product.
- This product is not a toy! Keep away from children and animals. Do not leave the product unattended during operation.
- Electrical connections must comply with national technical requirements.
- Insert the power plug into a properly installed power outlet.
- When selecting an extension cord, pay attention to the product’s power input, cable length and intended use. Fully uncoil the extension cord. Avoid electrical overload.
- Unplug the power cord from the outlet before performing maintenance, servicing or repairs. Always grasp the power plug when disconnecting.
- When not in use, turn off the product and unplug it from the power outlet.
- If the power plug or cord is damaged, do not use the product under any circumstances. If the power cord is damaged, it must be replaced by the manufacturer, its service agent or similarly qualified personnel to avoid hazards. A damaged power cable poses a serious health risk!
- When placing the product, observe the minimum distances to walls and other objects, as well as the storage and operating conditions specified in the “Maintenance and Care” section.
- Ensure the air inlet and outlet are not blocked.
- Keep the suction side free of dust and loose objects.

- Do not remove any safety signs, stickers or labels from the product. Keep all safety markings clearly visible.
- Drain collected condensate water before transport or storage. Do not drink it; it is harmful to health.
- Do not use solvent-based cleaners on the product. This may cause corrosion, damage, malfunction, electric shock or fire.
- Recommended ambient operating temperature: ≤95℉.

Grounding Requirements

- This appliance is equipped with a **3-prong (grounded)** power cord. Use it with a standard **3-slot (grounded)** wall outlet to minimize the risk of electric shock. Have a qualified electrician inspect the outlet and circuit to ensure proper grounding. **Do not cut or remove the third (grounding) pin** of the power plug.
- The appliance may occasionally lose power. Due to safety risks, **we strongly advise against using an adapter plug**. If you must use an adapter, it is for temporary connection only. Use a nationally listed adapter, available from most authorized retailers.
- The wide slot on the adapter must align with the wide slot on the outlet to ensure correct polarity.
- Connecting the adapter's grounding terminal to the wall outlet cover screw **does not ground the appliance**, unless the screw is metal and uninsulated, and the outlet is properly grounded.
- When disconnecting the cord from the adapter, **hold both parts separately**. Otherwise, the adapter's grounding terminal may be damaged. **Do not use the appliance with a damaged adapter plug**. Do not use an adapter if power loss occurs frequently, as repeated unplugging may damage the grounding terminal. Replace the wall outlet with a **3-slot (grounded)** outlet.



Caution

Warning: Flammable Hazard
The product uses eco-friendly R32 refrigerant. It is a mildly flammable refrigerant. Although it may burn or explode under certain conditions, there will be no risk of combustion or explosion if installed in a room of the correct area and used properly in accordance with the table below. Compared with conventional refrigerants, R32 is an environmentally friendly refrigerant that does not deplete the ozone layer and has a very low global warming potential.

Caution

Please read this manual before installation, use, or maintenance.
Do not use any method to accelerate defrosting or clean frosted parts unless specifically recommended by the manufacturer. Do not puncture or incinerate this air conditioner.
Store the air conditioner in a room free of continuous ignition sources (e.g., gas appliances with open flames, electric heaters, etc.). For repairs, contact the nearest after-sales service center.
Repairs must strictly follow the manufacturer's operation manual; repairs by unqualified personnel are prohibited.
Comply with national regulations regarding gas handling.
Recover and remove refrigerant from the system during repair or disposal.

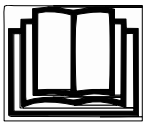

Read the user manual

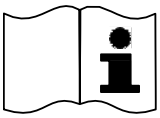

Read the installation instructions

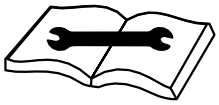

Read the service instructions

Improper operation may result in personal injury or property damage!

Be sure to inspect the user's power circuit, grounding and other electrical safety conditions to ensure compliance with national safety electricity regulations and requirements. The industrial portable air conditioner must be powered by an independent dedicated power branch circuit to prevent fire hazards caused by circuit overloading, overheating and short circuits.

Mandatory requirements for installation site selection (The following are selection criteria; approval from the user's property management is required prior to installation).

1.Keep away from areas with flammable and explosive gas leakage or environments with strong corrosive gas.

2. Avoid places directly affected by strong artificial electric and magnetic fields.

3.Stay away from locations prone to noise and vibration.

4.Avoid sites with harsh natural conditions such as heavy oil fume, strong wind and sand, and high-temperature heat sources.

5. Install the outdoor unit out of children's reach.

6.Choose locations with convenient maintenance, easy inspection and good ventilation.

7.Ensure sufficient space reserved for maintenance and servicing.



Warning

- For maintenance or disposal, please contact your local or authorized service center.
- Repairs performed by unqualified personnel may cause potential hazards.
- This product is charged with R32 refrigerant. All maintenance work shall be carried out in strict accordance with the manufacturer’s regulations. This section specifies special maintenance requirements for appliances using flammable refrigerants. Maintenance technicians shall refer to the after-sales service manual for detailed operating procedures.
- Qualification Requirements for Maintenance Personnel
- All operators and refrigeration system maintenance technicians must hold valid certificates issued by industry-recognized assessment institutions, proving they are qualified to safely handle refrigerants.
- Equipment maintenance and repair shall only be conducted in ways recommended by the manufacturer. If assistance from other professional staff is needed, all operations must be supervised by personnel qualified for R32 refrigerant handling.

SERIAL NUMBER LOCATION AND IDENTIFICATION

The serial number and name plate can be located near the lower right side of the unit.

CPTH-12EX

Nameplate Label

CPTH-12EX **PORTABLE Heat Pump**

Power	**AC 115 V, 1 phase, 60 Hz**
Total Input Current	**12.8 A**
Operating Range	**Cooling 64~114 ℉, Heating 35~81℉**
Heating Capacity	**12,000 Btu/h**
Cooling Capacity	**12,700 Btu/h**
Rated Heating Power	**I,280 W**
Rated Cooling Power	**1,400 W**
Compressor Rating (RLA/LRA)	**6.55 / 37 A**
Motor Rating (FLA/HP)	**6.6 A / 05 HP**
Maximum Allowable Pressure (Hi/Lo)	**3.5 / 1.0 MPa**
Refrigerant /Total Charge	**R32 / 430 g**
Weight	**179 lb (81 kg)**
Dimensions (W × D × H)	**22.8” x 24.6” x 43.5” 580 x 624 x 1,104 mm**
Serial No	

CPTH-18EX

Nameplate Label

CPTH-18EX **PORTABLE Heat Pump**

Power	**AC 115 V, 1 phase, 60 Hz**
Total Input Current	**15.7 A**
Operating Range	**Cooling 64~114℉, Heating 35~81℉**
Heating Capacity	**13,300 Btu/h**
Cooling Capacity	**15,400 Btu/h**
Rated Heating Power	**1,520 W**
Rated Cooling Power	**1,740 W**
Compressor Rating (RLA/LRA)	**9.15 / 44 A**
Motor Rating (FLA/HP)	**6.6 A / 0.5 HP**
Maximum Allowable Pressure (Hi/Lo)	**3.5 / 1.0 MPa**
Refrigerant / Total Charge	**R32 / 650 g**
Weight	**186 lb (84 kg)**
Dimensions (W × D × H)	**22.8” x 24.6” x 43.5” 580 x 624 x 1,104 mm**
Serial No	

INVENTORY

After unpacking your ClimaTemp Portable Heat Pump, please check to make sure you have the following items:

1. **CPTH-12EX/18EX Portable Heat Pump.**
2. **Operation Manual.**
3. **Kick Plate/Foot Pedal. (located under the unit). Please attach to bottom rear of unit.**

Note: If any of these items were not included in the box or appear damaged, please contact your ClimaTemp Portable spot air conditioner reseller for replacement.

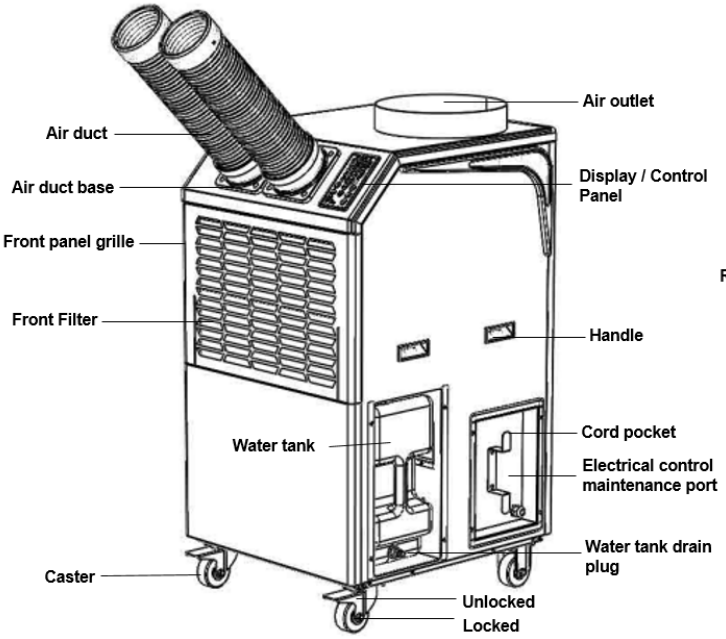

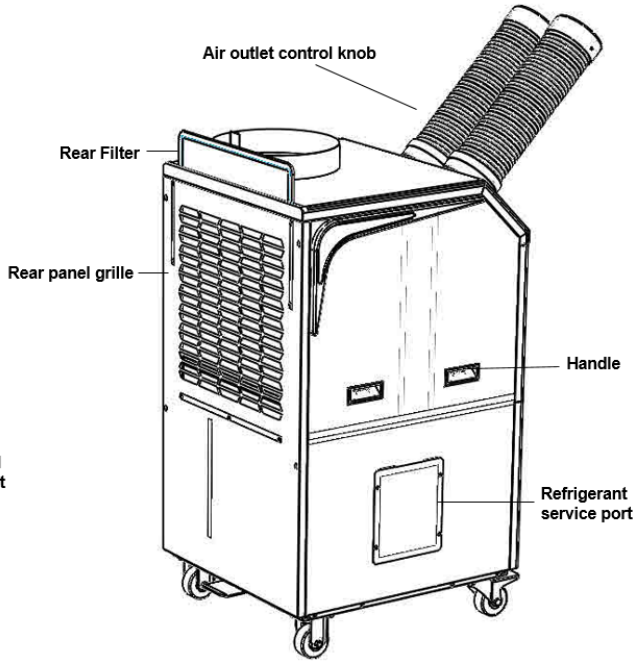

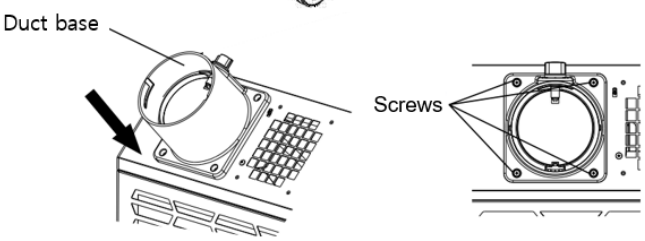

Installation Method of Air Supply Duct

Step 1: Place the air duct base at the top air outlet and align the screw holes.
Step 2: Fix the air duct base with the attached screws.
Step 3: Align the protrusion of the air supply duct connector with the recess of the base, insert it inward and rotate left to lock.

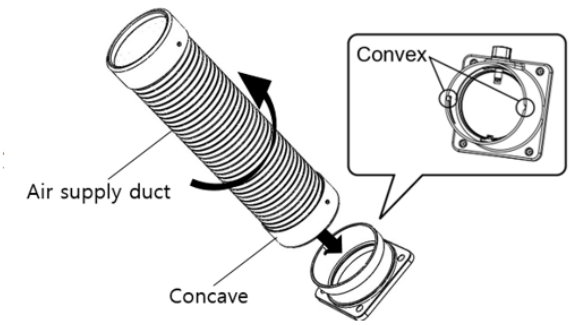

INSTALLATION& GENERAL SAFETY INFORMATION

- **Unit Designed for indoor usage only. Do not submerge or spray water on the spot cooler.**
- **Do not use the unit at conditions above 95℉ in cooling mode or below 40℉ in heating mode.**
- **Use 115V-60Hz, 1Phase power supply only. Securely plug into grounded 15amp outlet.**
- **Do not use an extension cord which may cause a risk of fire or electric shock.**
- **Do not bend or kink power cable. Damage to power cord can cause electric shock or injury.**
- **Do not place anything on the top of the machine. Do not stand or place hands or fingers inside of the unit while in operation.**
- **Install unit on smooth level ground. Lock the castors breaks to minimize rolling and movement.**
- **Always power off unit by the control panel, do not turn off by removing plug from power source.**
- **Condenser exhaust should always be ducted to the exterior or outside the area for maximum cooling.**
- **Do not pinch, minimize or constrict the duct size of the exhaust as this may cause then unit to malfunction or damage to the unit.**

When in operation, the front and back of the machine should be more than 20" from the wall or other barrier.

The cold air exhaust should be at least 12" away from any barrier and hot air exhaust should be more than 79" from roof or barrier.

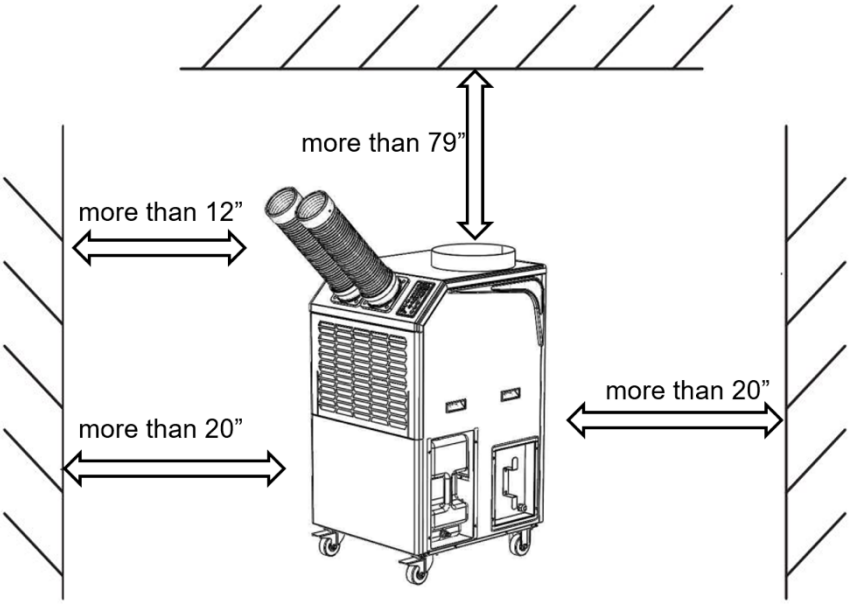

INSTALLATION(cont.)

Moving the Unit

Unlock the casters and push the Portable Heat Pump unit using the side handles to a flat, level surface and set the casters to the LOCKED position.

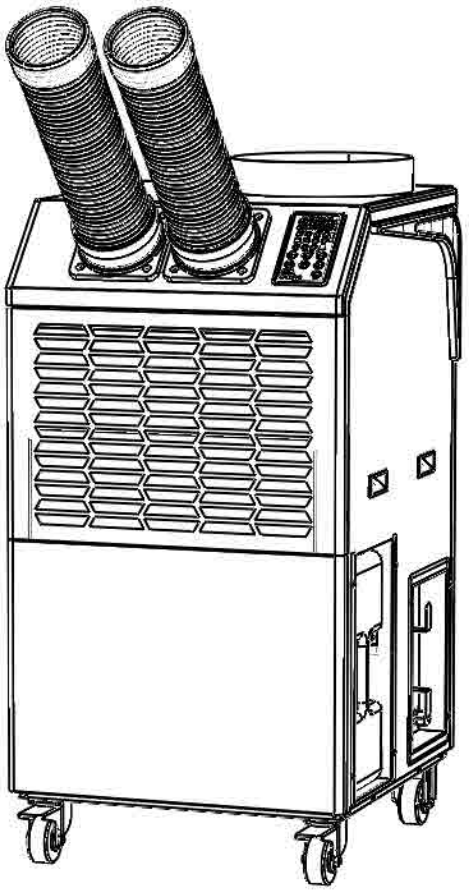

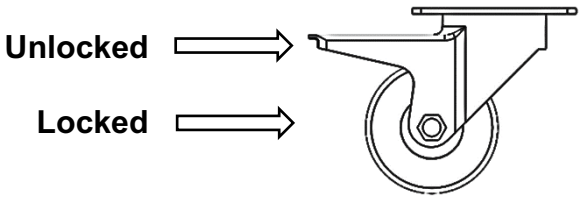

INSTALLATION(cont.)

Plugging in the Unit

1. Check the prongs and surface of the power cord plug for dust/dirt. If dust and/or dirt are present, wipe off with a clean, dry cloth.

2. Check the power cord, plug and prongs for damage.
If any damage is found, contact ClimaTemp Portables or a qualified technician for repair.

⚠ **WARNING**

1. If the power cord or plug is damaged, replacement should only be performed by qualified electrical personnel.

2. Because of potential safety hazards under certain conditions, we strongly recommend against the use of an extension cord.

Procedure for Testing Device

The CPTH-12EX/18EX is equipped with a LCDI power cord.

This device is non-serviceable and opening the device may cause electric shock or void the warranties of the product.

1. Plug into grounded appropriate 115v receptacle.

2. If unit does not operate, press the test button, followed by the reset button.

3. If test fails then do not use and contact your ClimaTemp reseller for replacement.

⚠ **CAUTION**

The power source should be a dedicated single outlet circuit with UL listed short-circuit and ground fault protective breaker.

Do not share the AC outlet with any other instrument or equipment.

MODEL	MINIMUM POWER SUPPLY RATING
CPTH-12EX	115V, single phase,60Hz,15A
CPTH-18EX	115V, single phase,60Hz,20A

OPERATION

Control Panel

Before operating the unit, it is important to familiarize yourself with the basic controls located on the control panel.

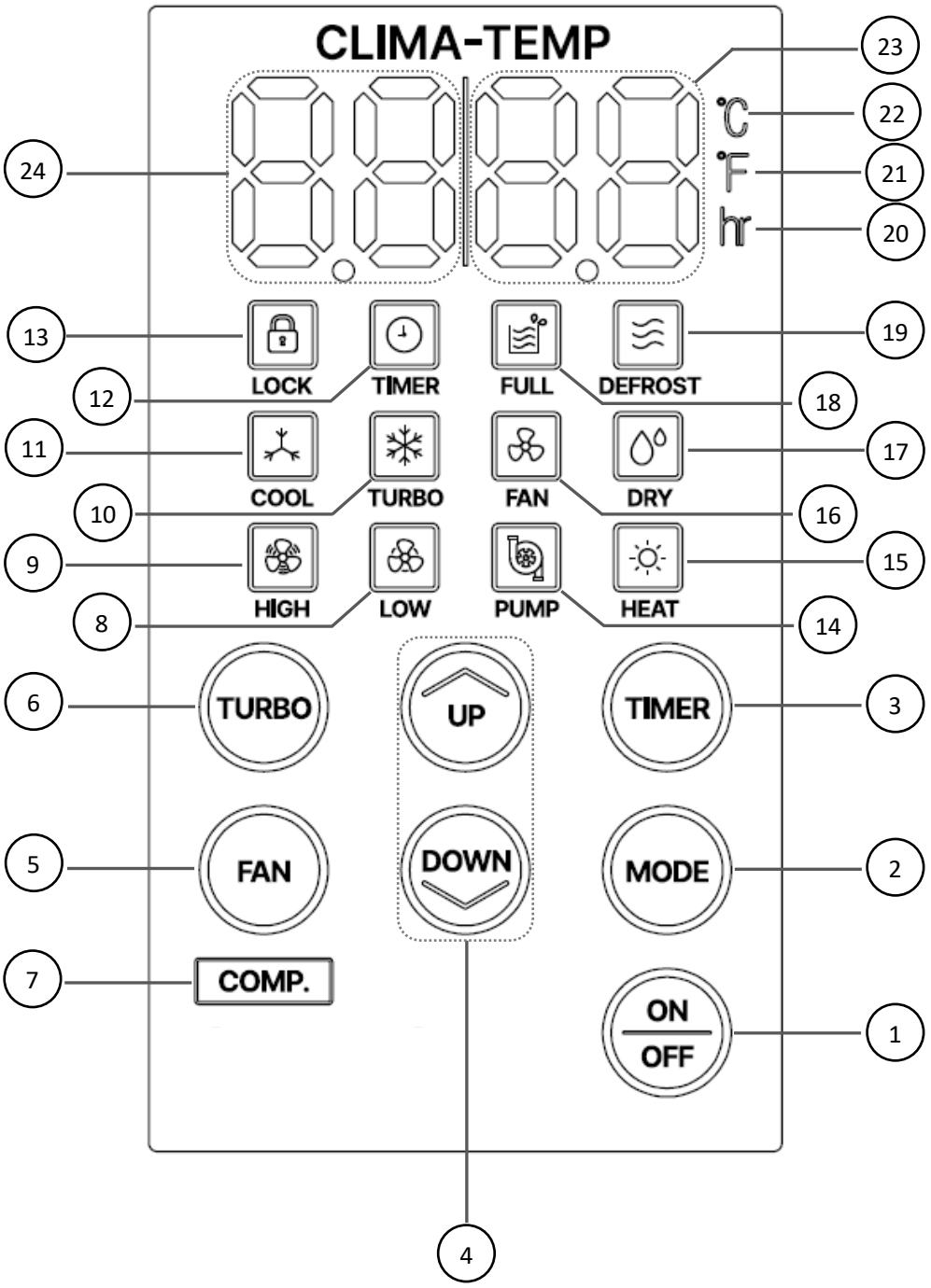

Button Instructions

① **Power On/Off Key Press this key to turn the air conditioner on or off.**

② **Mode Selection Key Press to select cooling, fan, dehumidification and heating modes (heating mode is only available for heat & cool models).**

③ **Timer Function Key Press it in standby mode to set timer-on time, press it in power-on state to set timer - off time.**

④ **Temperature/Time Adjustment Keys Under cooling, spot cool, dehumidification and heating modes, press to increase or decrease the set temperature. Under timer mode, adjust the timer on/off time. Press the two keys simultaneously to switch between Celsius and Fahrenheit display.**

⑤ **Fan Speed Key Press to select high and low fan speed.**

⑥ **Turbo Function key Press to select turbo mode.**

Display Instructions

⑦ **Compressor LED**

*** The lamp turns on when the compressor is running.**

⑧ **Low Fan LED**

*** The corresponding lamp turns on when the blower fan is set to Low**

*** When switching from operation mode to standby mode, the lamp blinks for about 20 seconds until the fan stops.**

⑨ **High Fan LED**

*** The corresponding lamp turns on when the blower fan is set to High.**

*** When switching from operation mode to standby mode, the lamp blinks for about 20 seconds until the fan stops.**

⑩ **Turbo Mode LED (Spot Cool Operation)**

*** Select mode via controller, indicator lights up.**

*** Select Turbo mode via controller, turbo indicator lights up.**

*** Adjust set temperature between 32℉ and 68℉ by up/down keys.**

*** Switch between low and high fan speed with fan speed key.**

⑪ **Cooling Mode LED**

*** Select cooling mode via controller, cooling indicator lights up.**

*** Adjust set temperature between 59℉ and 95℉ by up/down keys.**

*** Switch between low and high fan speed with fan speed key.**

⑫ **Timer Mode LED**

*** In standby state, press timer key to set timer-on, adjust time from 0 to 24 hours**

*** via up/down keys, timer indicator lights up.**

*** In power-on state, press timer key to set timer-off, adjust time from 0 to 24 hours via up/down keys, timer indicator lights up.**

*** While the time is blinking on FND2 during timer setting, press the timer key to cancel the timer function; the timer LED also turns off.**

⑬ **Lock Mode LED**

*** Press the power key for 3 seconds to activate the lock (corresponding LED on) or unlock (corresponding LED off) function.**

*** While the lock function is active, all button inputs are disabled. Timer functions operate normally while locked, and the lock function is released in the event of a power failure.**

*** When an FL, HP, EC, E1 or E3 error occurs, the power key remains operable.**

⑭ Pump Mode LED

*** This function indicates whether the current drainage method is pump mode or tank mode.**

*** The unit automatically detects whether the pump connector is connected to the main body.**

*** The lamp turns on when the pump is connected and turns off when the tank is used.**

⑮ Heating Mode (Only for heat & cool models) LED

*** Select heating mode via controller, heating indicator lights up.**

*** Adjust set temperature between 59℉ and 95℉ by up/down keys.**

*** Switch between low and high fan speed with fan speed key.**

⑯ Fan Mode LED

*** Select fan mode via controller, fan indicator lights up.**

*** Switch between low and high fan speed with fan speed key.**

*** Temperature setting is unavailable.**

⑰ Dehumidification Mode LED

*** Select dehumidification mode via controller, dehumidification indicator lights up.**

*** Adjust set temperature between 59℉ and 95℉ by up/down keys.**

*** The unit runs at fixed low fan speed.**

⑱ Water Full LED

*** The lamp turns on when the tank is full of water.**

⑲ Defrost LED

*** The defrost LED turns on while the unit is performing the defrost function.**

"EF" lights up on FND2.

⑳ Time Display LED

*** The lamp turns on when time is displayed on FND2.**

㉑ Fahrenheit Display LED

*** The lamp turns on when Fahrenheit is displayed on FND1 / FND2.**

㉒ Celsius Display LED

*** The lamp turns on when Celsius is displayed on FND1 / FND2.**

㉓ FND2

*** This window displays set temperature or timer time.**

㉔ FND1

*** This window shows ambient temperature or air outlet temperature.**

Water tank

1. Hold the water tank handle and push it in until it reaches the limit stopper.

2. Condensed water formed on the evaporator surface flows into the water tank.

3. Water tank capacity: 25L.

4. The water tank can be easily taken out from the unit for water draining.

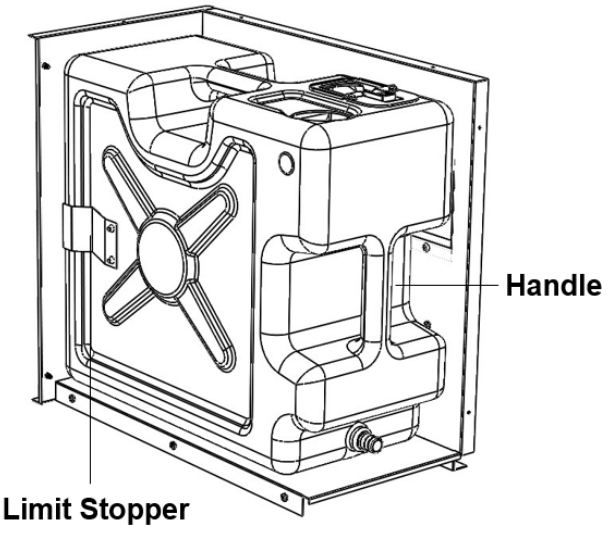

Notes

Check if the unit is in water-full status.

When water reaches the tank limit, the machine will stop running automatically.

Empty the water and reinstall the tank to resume operation.

***Do not move the unit when the water tank is full. Drain the water first before moving*.**

Maintenance and Inspection

1. Clean the filter screen regularly. Dust or dirt buildup on the screen will reduce air intake, potentially causing frost on the heat exchanger and machine malfunction. The filter screen can be pulled out directly from the front/rear panel grilles.

***Note: When cleaning the machine's surface, do not use thinners, volatile oils, chemicals, or other substances that may damage the surface*.**

2. Inspect the power cord for damage. To avoid hazards, damaged cords must be replaced by the manufacturer, its maintenance department, or a qualified professional.

3. Before storing the machine for an extended period, drain all water from the tank and store the tank only after it is completely dry.

4. Do not store the machine horizontally or upside down.

5. Store the machine out of children's reach. Avoid storing it in high-temperature environments, areas exposed to rain, or direct sunlight. Always unplug the power cord before storage.

Note: During maintenance, inspection, or part replacement, always unplug the power cord first.

Troubleshooting

Fault Type	Cause of Fault	Countermeasure
No Operation	Power plug is loose or disconnected	Firmly insert the power plug into the socket
No Cooling	1. Dirty/blocked condenser surface 2. Faulty heat exhaust fan 3. Excessively high ambient temperature 4. Damaged compressor capacitor 5. Blocked refrigeration system pipeline 6. Excessively high/low input voltage 7. Compressor overheat/overload protection; 8. Faulty compressor motor	1. Clean the condenser surface for proper ventilation 2. Repair/replace the heat exhaust fan 3. Use the machine in a suitable location 4. Replace the compressor capacitor 5. Replace the pipeline system 6. Use a suitable voltage 7. Restart after cooling 8. Repair/replace the compressor
Water Leakage	1. Blocked drain pipe port 2. Misaligned water storage tank 3. The filter screen has dust and dirt 4. The water level in the water tank is too high	1. Clear the drainage pipe 2. Please install it correctly in place 3. Please clean the filter screen 4. Please pour out the water

Fault Codes

Error Code	Inspection Item	Cause	Corrective Action
FL	Full Water (Water Tank Full)	Condensate water tank is full	Empty the water tank and press the power button to restart the unit.
E1	Indoor Temperature Sensor Failure	Indoor temperature sensor is disconnected or malfunctioning	Contact the service center for replacement of the temperature sensor.
E2	Refrigeration Outlet Temperature Sensor Failure	Refrigeration outlet temperature sensor is disconnected or malfunctioning	
E3	Freeze Protection Temperature Sensor Failure (Cooling)	Temperature sensor is disconnected or malfunctioning	
E4	Freeze Protection Temperature Sensor Failure (heating)	Temperature sensor is disconnected or malfunctioning	
EC	Indoor Unit (Cooling) Freeze Protection	Indoor air filter is clogged	Clean the filter.
		Indoor temperature is too low	Operate the air conditioner when the indoor temperature is the 59℉ or higher.
		Unit has been operated for an extended period at low airflow	Operate the unit at high airflow.
		Refrigeration outlet airflow is completely blocked	Adjust the refrigeration outlet airflow to medium or higher (manual adjustment).
		Indoor fan motor failure	Contact the service center.

Error Code	Inspection Item	Cause	Corrective Action
HP	Refrigerant High-Pressure Protection	Indoor temperature is too high	Operate the air conditioner after ventilating until the indoor temperature is below 104℉.
		Filter clogged (outdoor unit)	Clean the filter.
		Outdoor fan motor failure	Contact the service center.
		Exhaust duct may be installed incorrectly (Check installation precautions before use)	Prevent the exhaust ducting from being blocked or pinched. Do not use the unit when indoor temperature is above 104℉.
EF	Cooling Defrost Heating Defrost	Cooling Defrost Frost forms on the evaporator. Evaporator temperature (TH3) stays at for 3 minutes or longer. Insufficient refrigerant. Foreign matter on the evaporator-side filter.	The defrost function is performed automatically. During defrost, the compressor stops and the fan keeps running. Defrost is released when the evaporator temperature (TH3) reaches 41℉ or higher, or after defrost has run for 10 minutes or longer. If defrost is not released, clean the evaporator-side filter.
		Heating Defrost Frost forms on the condenser. Condenser temperature (TH4) stays at 23℉ for 45 minutes or longer. Foreign matter on the condenser-side filter.	The defrost function is performed automatically. During defrost, the 4-way valve is set to OFF and the compressor operates (reverse cycle), and the fan stops. Defrost is released when the condenser temperature (TH4) reaches 50℉ or higher, or after defrost has run for 15 minutes or longer. If defrost is not released, clean the condenser-side filter.

DAILY INSPECTION & MAINTENANCE

Empty the Drain Tank

To empty the drain tank, refer to instructions on page 20.

Clean the Air Filters

Clean the air filters once a week. If the unit is used in a dusty environment, more frequent cleaning may be required. A dirty filter can reduce air output resulting in a decrease in the cooling capacity and damage to the compressor and components.

Filter Removal Method

1. **Turn the unit off by pressing the Power button.**
2. **Remove the two air filters.**

Note: To remove the front evaporator filter, slide the filter by pulling the filter out of the machine's front evaporator panel. To replace the filter slide filter back into evaporator panel.

To remove the rear condenser filter, pull filter up and out of the condenser frame. To replace filter, slide filter back into condenser frame with tab facing up.

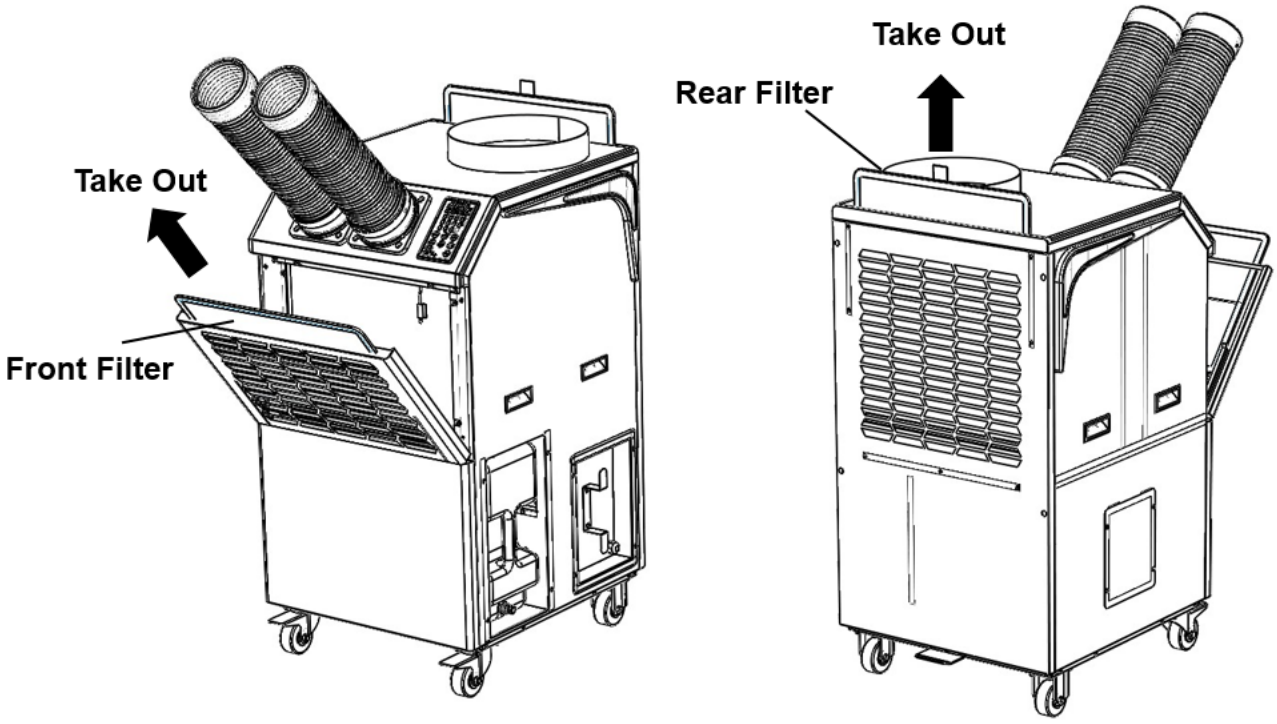

Filter Cleaning Method

1.Remove filters. Dust, dirt and particulate can be removed from the filter with a vacuum cleaner, or rinse in cold or lukewarm water.

If the element is extremely dirty, wash with a neutral detergent.

2. After the element has been cleaned, rinse with clean running water, allow to dry, then reinstall filters into unit.

End of Season Maintenance.

1. Wrap power cord on cord wrap holder.

2. Remove all water from condensate bucket.

3. After cleaning the unit completely dry with scratch resistant cloth.

4. Unit should be operated in fan mode (bring unit to highest set point) to dry for 2-3 hours.

5. Cover unit to prevent dust and humidity.

Accessory List

	Accessory	Qty
CPTH-12EX/18EX	Air supply duct	2
	Duct base	2
	screws	8
	User manual	1

Memo

Rev:1.0

Limited Warranty

ClimaTemp Portables Inc. warrants its portable air conditioners, heat pumps, and water-cooled portable air conditioners against defects in materials or workmanship under normal use. During the 12-month limited warranty period from the date of purchase (determined by the ship date or documented installation date), ClimaTemp will, at its discretion, repair or replace any defective product or part, covering parts and predefined labor costs. An additional 24-month standard compressor warranty applies solely to the compressor, excluding refrigerants, labor, or additional parts and services.

Exclusions

This warranty applies exclusively to portable air conditioners, heat pumps, and water-cooled portable air conditioners manufactured by ClimaTemp Portables Inc. It does not cover:

- Dehumidifiers or products not manufactured by ClimaTemp, including private-labeled products.
- Issues arising from improper operation, neglect, abuse, abnormal use, incorrect electrical connections, or failure to perform routine maintenance.
- Damage due to improper installation, shipping, or transport.
- Damage from abnormal power conditions, including loss of power, voltage irregularities, power surges, or improper voltage.
- Expenses for labor or materials related to the removal or reinstallation of the product.

Manufacturer Liability

ClimaTemp Portables Inc. shall not be responsible or liable for any damage to a distributors or customer's property resulting from the use, misuse, or installation of its equipment, including but not limited to water-cooled products. Customers assume full responsibility for proper operation and maintenance in accordance with provided instructions. Any issues caused by customer misuse or damage will result in repair charges billed to the customer. All shipping charges for returned parts are the responsibility of the customer.
Water-cooled Liability Statement: The customer assumes all and full responsibility for the use of water-cooled portable air conditioners in any application and acknowledges that the manufacturer is not liable for any damages to property resulting from its operation or misuse. Any maintenance, installation, or handling of the unit must be performed in accordance with the provided guidelines, and the customer accepts all risks associated with its use. The manufacturer disclaims responsibility for any property damage, loss, or injury caused by the unit's operation or failure to follow instructions.

Warranty Conditions

This limited warranty is conditional upon:

1. Return of the defective part to ClimaTemp Portables Inc. All shipping charges for returned parts are the responsibility of the customer.
2. If return is not feasible, submission of pictures of the defective part, area, or repair, as requested and approved by ClimaTemp.
3. Determination by ClimaTemp that a defect in material or workmanship exists.

Disclaimer of Warranty

Except as expressly stated in this warranty policy, ClimaTemp Portables Inc. disclaims all representations, conditions, and warranties, whether express or implied, including but not limited to implied warranties of title, merchantability, non-infringement, and fitness for a particular purpose.

Limitation of Liability

ClimaTemp Portables Inc. shall not be liable for any special, incidental, punitive, or consequential damages, including loss of profits, whether arising in contract, tort, warranty, or otherwise, even if advised of the possibility of such damages. These limitations apply even if remedies such as error correction, repair, replacement, performance of services, or refund of payments fail their essential purpose. ClimaTemp's total liability, whether in contract, tort, negligence, strict liability, by statute, or otherwise, is limited to the customer or third party making the claim.

Shipping Policy ClimaTemp Portables Inc.

Order Processing & Shipping

We process most in-stock orders within 1–2 business days (Monday–Friday, excluding holidays). Custom or built-to-order units, large production orders, or items requiring special preparation may take additional lead time—we will notify you with an estimated timeline before confirming your order.

Once your order ships, you will receive a shipping confirmation email with tracking information (when available).

Shipping Methods and Delivery

- Smaller items/accessories: Shipped via UPS, FedEx, or similar ground carriers.
- Large equipment/portable cooling units: Shipped via LTL (Less-Than-Truckload) freight carriers. These shipments typically require a scheduled delivery appointment and may involve a liftgate, forklift, or other unloading equipment at the destination.
- We ship primarily within the continental United States. International shipping, Alaska, Hawaii, and remote locations are available on a case-by-case basis and will be quoted separately.

Delivery estimates are provided but actual delivery times can vary due to carrier schedules, weather, traffic, or other factors beyond our control.

Shipping Costs

Shipping charges are calculated and quoted prior to order finalization. Factors include weight, dimensions, destination, and shipping method.

- Additional fees may apply for: liftgate service, residential delivery, limited-access locations, address corrections, redelivery, or fuel surcharges.

All shipments are FOB Origin unless otherwise specified in writing. Title and risk of loss generally pass to the customer upon tender to the carrier.

Customer Responsibilities Upon Acceptance of Shipment
It is your responsibility to inspect all shipments thoroughly upon delivery.

1. Visible Damage or Shortages:
    - Inspect the exterior packaging and contents before signing the delivery receipt (Bill of Lading or Proof of Delivery).
    - Note any visible damage, shortages, or exceptions on the carrier's delivery receipt (e.g., "damaged packaging," "crushed corner," "short 1 unit"). Have the driver acknowledge it.
    - Take clear photographs of the packaging, any damage, and the overall shipment before unloading.
    - Do not refuse the entire shipment for multiple items unless it is completely unusable—accept it and note exceptions to preserve your claim options.
2. Concealed Damage: If damage is discovered after opening the packaging, notify us and the carrier immediately (ideally within 24–48 hours of delivery, and no later than the carrier's deadline, often 5–7 days). Retain all original packaging, packing materials, and damaged items for inspection.
3. Acceptance: Signing the delivery receipt without noting exceptions constitutes acceptance of the shipment in "apparent good order and condition." Once accepted without proper notation, responsibility for any subsequent issues (including damage that could have been noted at delivery) shifts to the customer.

Failure to properly inspect, document, and notify may result in denial of damage claims by the carrier and/or us.

Claims for Damaged or Lost Shipments

- Contact us immediately with your order number, tracking details, photos, and carrier documentation.
- You must cooperate fully, including making the shipment available for carrier inspection if required.
- We are not responsible for delays or denials caused by improper documentation or late reporting.

Other Important Notes

- Returns: All shipping charges for returned parts are the responsibility of the customer. Return shipping is typically the customer's responsibility unless the shipment was damaged or incorrect due to our error.
- Force Majeure: We are not liable for delays caused by events beyond our reasonable control (e.g., weather, strikes, carrier issues, natural disasters).
- This policy is subject to change. Please review it periodically or contact us with questions.
-

For questions about your specific shipment, contact our customer service team at 844-349-5665.
Thank you for choosing ClimaTemp Portables. We strive for reliable delivery and stand behind our products and service.

DISCLAIMER OF WARRNTY EXCEPT AS EXPRESSLY PROVIDED IN THIS STANDARD WARRANTY POLICY STATEMENT, CLIMATEMP PORTABLES HEREBY EXPRESSLY DISCLAIMS ALL REPRESENTATIONS, CONDITIONS AND WARRANTIES, WHETHER EXPRESS OR IMPLIED, INCLUDING BY WAY OF EXAMPLE AND NOT LIMITATION, THE IMPLIED WARRANTIES OF TITLE, MERCHANTABILITY, NONINFRINGEMENT AND FITNESS FOR A PARTICULAR PURPOSE. LIMITATION ON LIABILITY NOTWITHSTANDING ANYTHING HEREIN TO THE CONTRARY, IN NO EVENT WILL CLIMATEMP PORTABLES BE LIABLE FOR ANY SPECIAL, INCIDENTAL, PUNITIVE OR CONSEQUENTIAL DAMAGES WHATSOEVER, INCLUDING LOSS OF PROFITS, WHETHER ARISING IN CONTRACT, TORT, WARRANTY OR OTHERWISE, EVEN IF IT HAS BEEN ADVISED OF THE POSSIBILITY OF SUCH DAMAGES. THE LIMITATIONS SET FORTH HERE WILL APPLY EVEN IF THE REMEDIES OF ERROR CORRECTION, REPAIR OR REPLACEMENT, REPERFORMANCE OF SERVICES AND REFUND OF PAYMENTS COMPLETELY FAIL OF THEIR ESSENTIAL PURPOSE. NOTWITHSTANDING ANYTHING HEREIN TO THE CONTRARY, THE LIMIT OF CLIMATEMP PORTABLES (WHETHER IN CONTRACT, TORT, NEGLIGENCE, STRICT LIABILITY, BY STATUTE OR OTHERWISE) TO CUSTOMER OR TO ANY THIRD PARTY WITH RESPECT TO WHICH SUCH CLAIM IS MADE. GOVERNING LAW AND JURISDICTION

ClimaTemp Portables Inc.

844-349-5665

www.Clima-Temp.com